101

COPENHAGEN



BRUTUS SLIM DINING CHAIR

Inspired by the Brutalist architecture movement of the mid-20th century, the Brutus collection is reimagined in solid oak with a natural finish, highlighting the raw beauty and timeless appeal of the material itself. Featuring a lounge chair, coffee table and two dining chairs, each piece is carefully crafted to showcase the interplay between architectural strength and organic warmth. The solid oak construction enhances the sculptural quality of each design, where sharp, defined lines meet gentle curves of the backrests and armrests. This balance of hard and soft creates a visual dynamic, making the Brutus collection both striking and approachable. The natural finish allows the wood's grain and texture to shine, offering a refined yet raw aesthetic that evolves beautifully over time. Made from FSC-certified American Red Oak, each piece in the Brutus collection is handmade by skilled craftsmen. Ensuring a flawless execution with seamless connections between various components, the Brutus furniture exudes minimal and clean aesthetics. Each piece in the Brutus collection stands as a statement of craftsmanship and design, seamlessly merging architectural precision with the inviting warmth of natural oak. Designed by Kristian Sofus Hansen & Tommy Hyldahl.

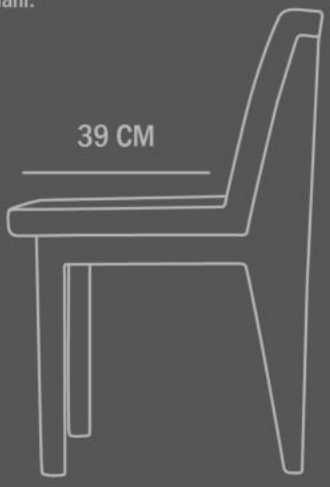

Product no: 253073

Type: Dining Chair - Indoor

Designer / Year of design:
Kristian Sofus Hansen & Tommy Hyldahl, 2025

Colour: Coffee Black Oak
Material: Oak

Care instructions:
Use a moist cloth to clean the chair.
Do not use household cleaners containing acid.

Dimensions: L43 / W53 /H78 CM
Seat height: 46,5 CM / Seat depth: 38 CM
Backrest height: 34 CM
Weight capacity: 150 Kgs

Country of origin: CN
Product weight: 8,66 Kgs

Packaging:
Dimensions: L46/ W56 / H81 CM
Total weight incl. product: 14,5 Kgs
Number of parcels: 1
Material: Brown cardboard

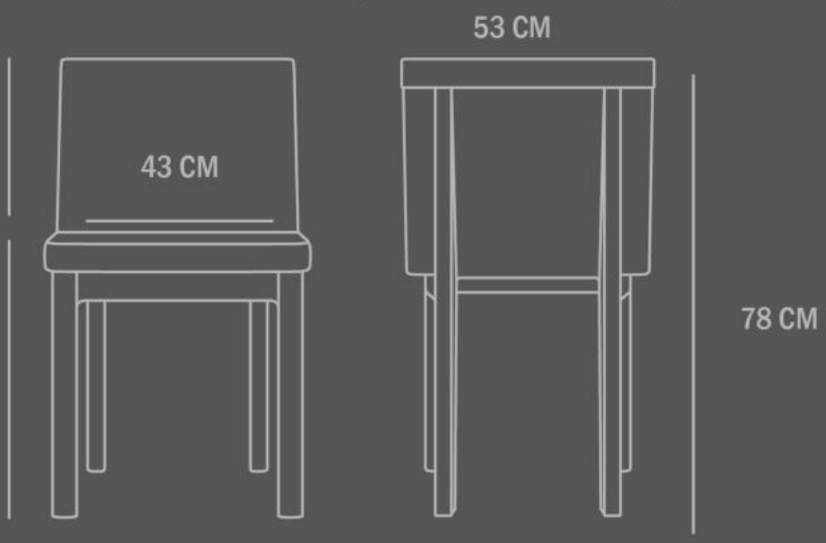

101 COPENHAGEN ©

101

COPENHAGEN



BRUTUS SLIM DINING CHAIR

Inspired by the Brutalist architecture movement of the mid-20th century, the Brutus collection is reimagined in solid oak with a natural finish, highlighting the raw beauty and timeless appeal of the material itself. Featuring a lounge chair, coffee table and two dining chairs, each piece is carefully crafted to showcase the interplay between architectural strength and organic warmth. The solid oak construction enhances the sculptural quality of each design, where sharp, defined lines meet gentle curves of the backrests and armrests. This balance of hard and soft creates a visual dynamic, making the Brutus collection both striking and approachable. The natural finish allows the wood's grain and texture to shine, offering a refined yet raw aesthetic that evolves beautifully over time. Made from FSC-certified American Red Oak, each piece in the Brutus collection is handmade by skilled craftsmen. Ensuring a flawless execution with seamless connections between various components, the Brutus furniture exudes minimal and clean aesthetics. Each piece in the Brutus collection stands as a statement of craftsmanship and design, seamlessly merging architectural precision with the inviting warmth of natural oak. Designed by Kristian Sofus Hansen & Tommy Hyldahl.

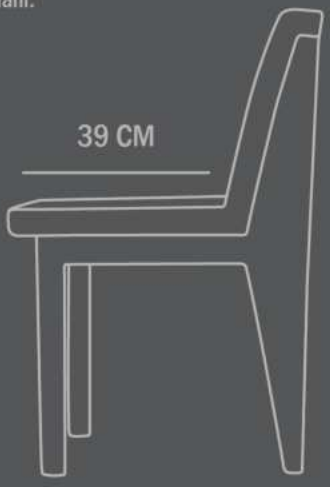

Product no: 251043

Type: Dining Chair - Indoor

Designer / Year of design:
Kristian Sofus Hansen & Tommy Hyldahl, 2024

Colour: Natural Oak
Material: Oak

Care instructions:
Use a soft dry cloth to clean the product.
Do not use household cleaners.
Not frost-proof

Dimensions: L43 / W53 /H78 CM
Seat height: 46,5 CM / Seat depth: 38 CM
Backrest height: 34 CM
Weight capacity: 150 Kgs

Country of origin: CN
Product weight: 8,66 Kgs

Packaging:
Dimensions: L46/ W56 / H81 CM
Total weight incl. product: 14,5 Kgs
Number of parcels: 1
Material: Brown cardboard

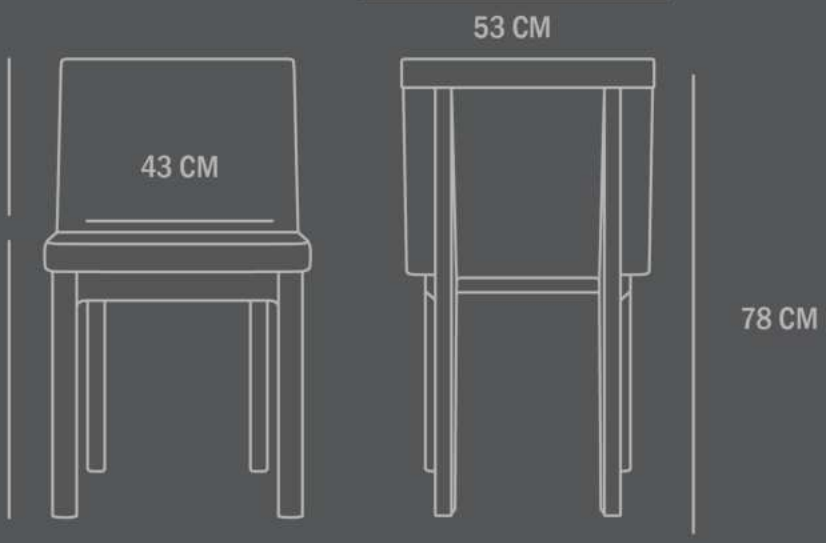

101 COPENHAGEN ©

101

COPENHAGEN



BRUTUS SLIM DINING CHAIR

Inspired by the Brutalist architecture movement of the mid-20th century, the Brutus collection comprises two different kinds of dining chairs, a lounge chair, a stool, and a coffee table cast in lightweight fibre concrete creating a unique surface texture increasing mobility.

Each piece is hand painted to create a textured, unique surface. Emphasizing the fine balance between sharp architectural lines and a somewhat softer curve in the back and armrest, the Brutus collection is sculptural statement pieces with a compelling seating comfort.

Designed by Kristian Sofus Hansen & Tommy Hyldahl.

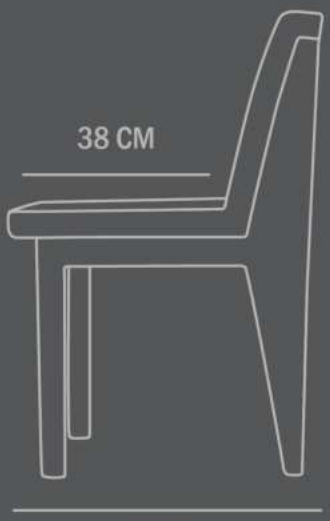

Product no: 223011

Type: Dining Chair - Indoor

Designer / Year of design:
Kristian Sofus Hansen & Tommy Hyldahl, 2021

Colour: Coffee
Material: Fiber Concrete

Care instructions:
Use a soft dry cloth to clean the product.
Do not use household cleaners.
Not frost-proof

Dimensions: L52 / W43 /H78,5 CM
Seat height: 46,5 CM / Seat depth: 38 CM
Backrest height: 34 CM
Weight capacity: 150 Kgs

Country of origin: CN
Product weight: 17 Kgs

Packaging:
Dimensions: L61/ W52 / H86 CM
Total weight incl. product: 19,5 Kgs
Number of parcels: 1
Material: Brown cardboard



101 COPENHAGEN ©